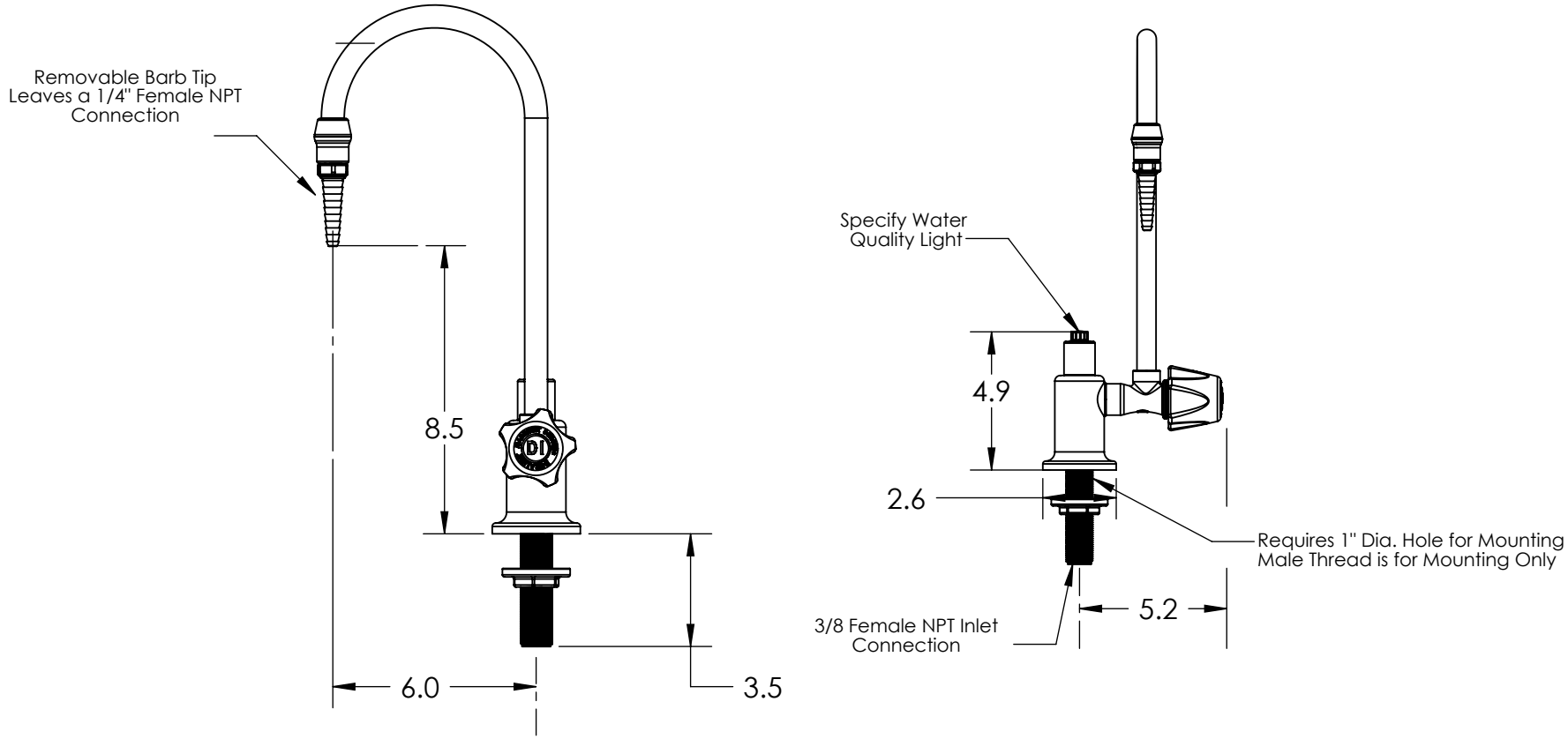

Designer		
Review		
Engineer		

TITLE: Lab Faucet, Deck Mount, Duraline Control Valve, Water Quality Light Handle on Right

MARQUEST SCIENTIFIC
Fluid Handling Products

DWG. NO. LG-DDWQL-R

REV

UNLESS OTHERWISE SPECIFIED
DIMENSIONS ARE IN INCHES

2950 Airway Avenue, Costa Mesa, CA 92626

SCALE: N/A | Format: SD | SHEET 1 OF 1

5 4 3 2 1